RoHS COMPLIANT

0.8 Pin Header Dual Row Double Plastic SMT Type

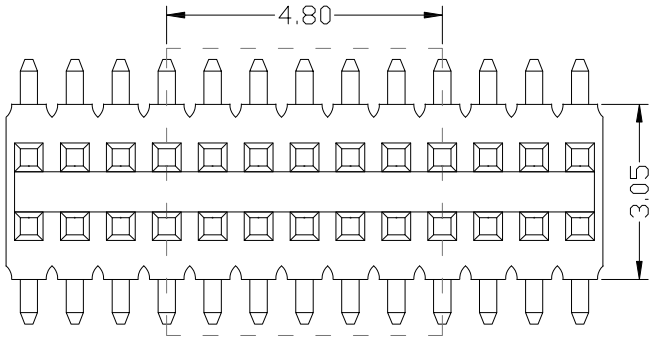

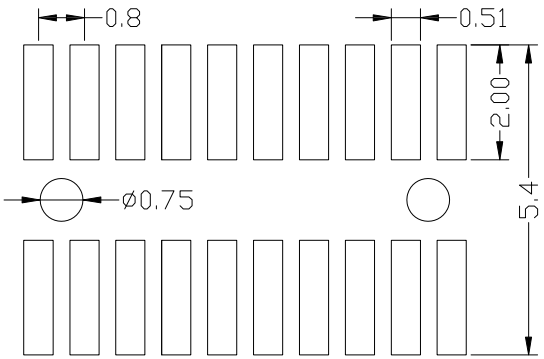

PCB LAYOUT

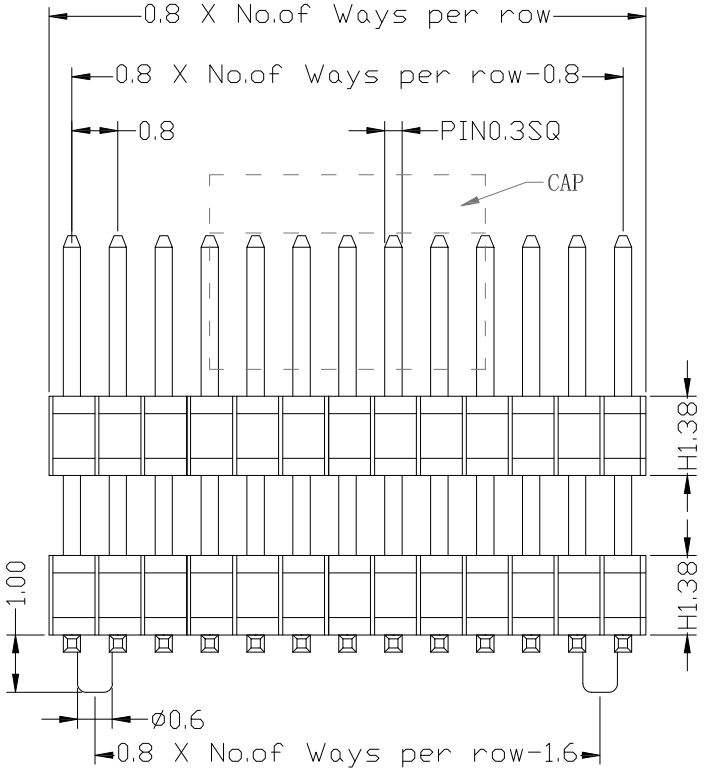

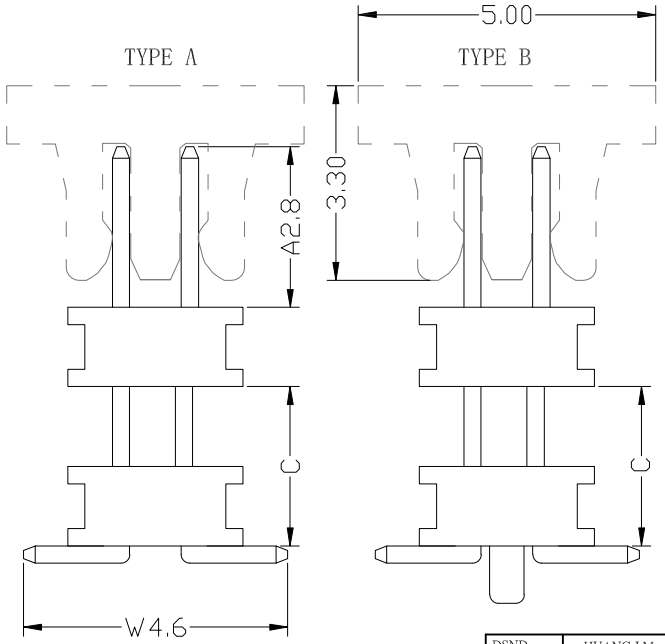

SPECIFICATION

Current Rating:	1Amp
Insulation Resistance:	5000M ohms min
Contact Resistance:	20M ohms max
Dielectric Withstanding:	AC500V
Operating Temperature:	-65°Cto+125°C
Contact Material:	Brass
Insulator Material:	PBT,UL 94V-0
	Standard:PBT,UL94V-0 Black

Ordering Code:

PHAM02 - X - X - D - X - C - X - X

① ② ③ ④ ⑤ ⑥ ⑦ ⑧

① Series No:

② No.of Contacts
02 To 100

③ Contact Plating
G0: Gold flash
G1: 3U" Gold
G2: 5u" Gold
G3: 10u" Gold
G4: 15u" Gold
G5: 30u" Gold
SN:Tin

④ Connector Type
D:Dual

⑤ Pin Length:
A+C+H+(W-1.2)/2
Please mark the desired length in the A/W

⑥ Insulator Material
B:PA6T
C:LCP

⑦ Packing
A:Tray
B:Bag
T:Tube
U:Tube+CAP
R:Tape&Reel
W:Tape&Reel+CAP

⑧ Special Function
A:Type A
B:Type B

A	W	C
Optional	Optional	Optional

MARK	DESCRIPTION		DATE	REVISED	APPROVED
	REVISIONS				

unless otherwise specified tolerance:
X±: 0.35
.X±:0.25, ANG±2°
.XX±:0.20,
.XXX±:0.15,

DSND	HUANG.J.M	DATE	2017-12-08	SCALE:	
CHKD				VIEW:	
APVD				UNIT:	mm

FSCONN.

Dongguan Fushu Electronic Technology Co.,Ltd
Tel:0755-81765247/41 Fax:0769-81765203

NAME: 0.8mm Pin Header SMT Type Dual Ro Double Plastic

Part No: PHAM02-x-x-D-x-C-x-x

Customer Part NO:(DWG NO.)